DETAIL NO. 47

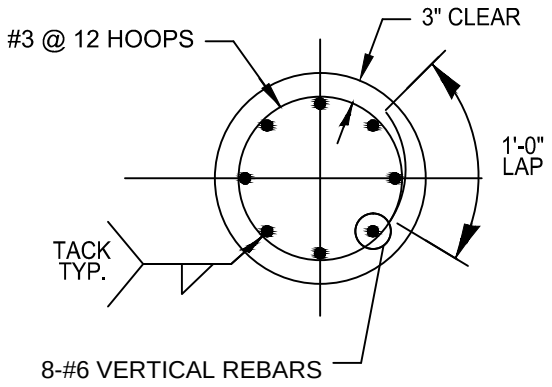

SECTION A-A

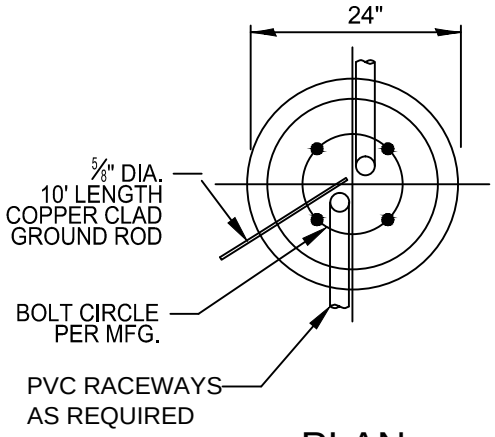

PLAN

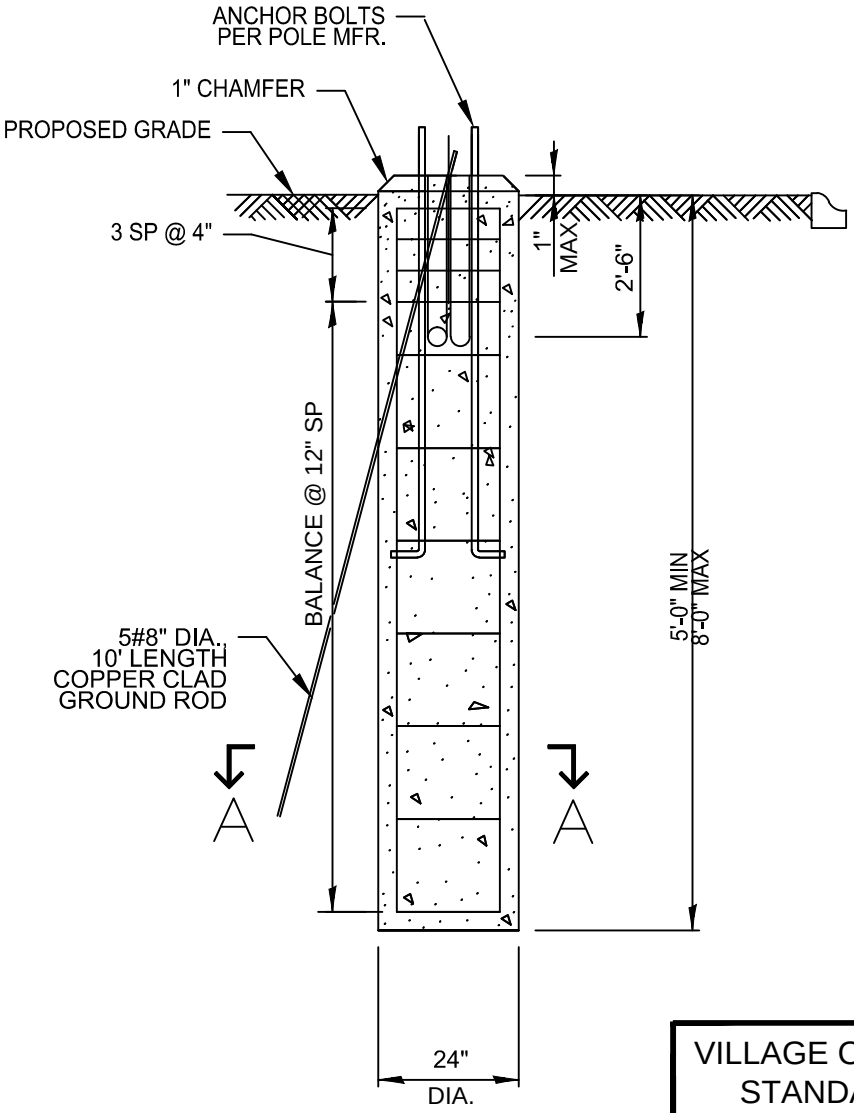

VILLAGE OF NEW LENOX
STANDARD DETAIL
FOR
CONCRETE FOUNDATION

REV:	
DATE:	AUGUST 2014
FILE:	TRANS\CONCFOUND