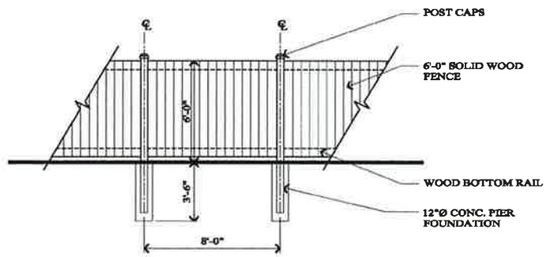

ELEVATION

SITE FENCE

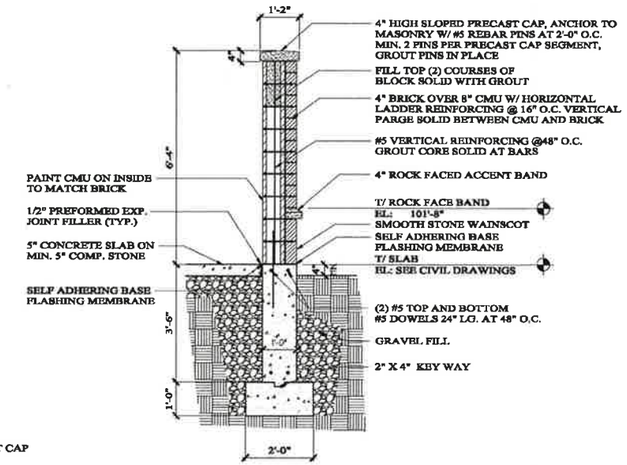

WALL DETAIL

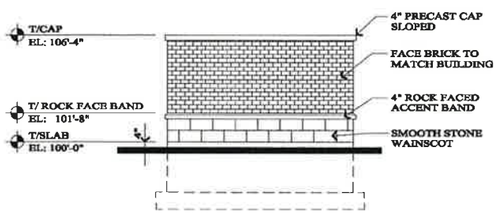

SIDE ELEVATION

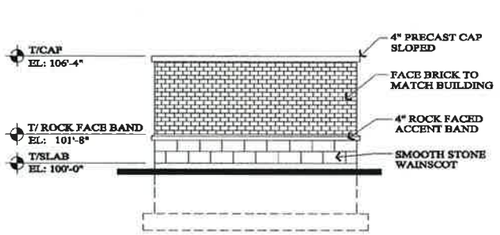

REAR ELEVATION

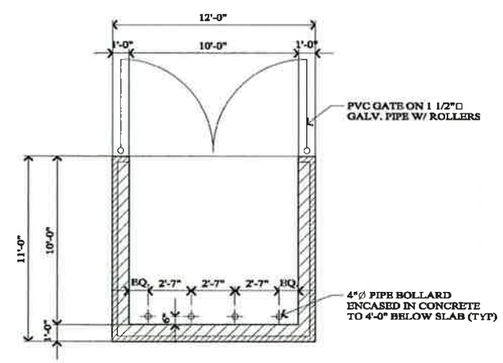

PLAN

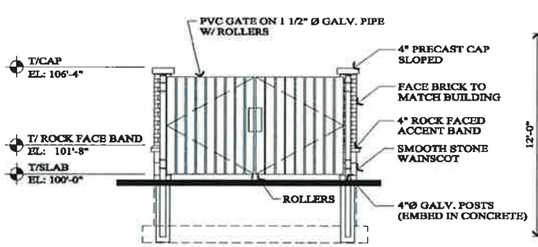

FRONT ELEVATION

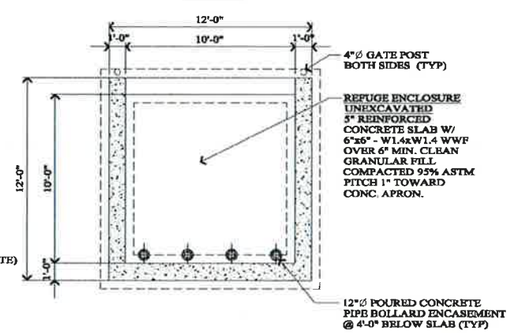

FOUNDATION PLAN

TRASH ENCLOSURE

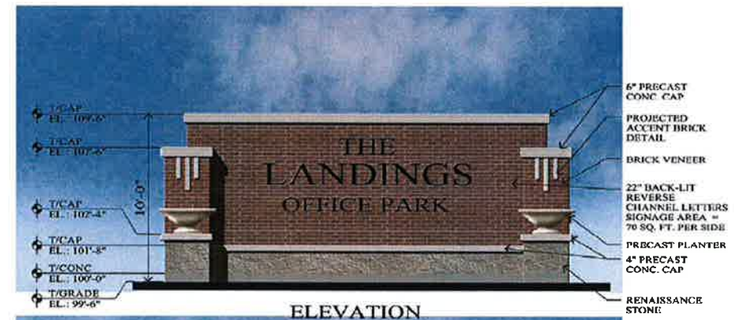

ELEVATION

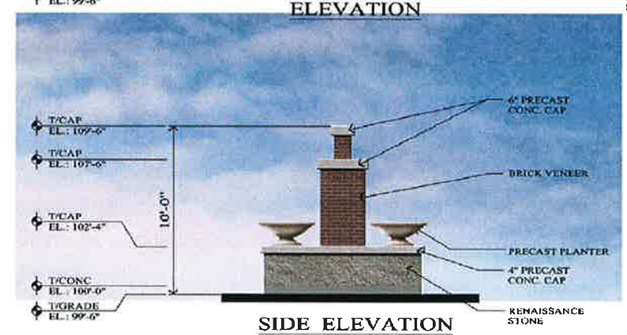

SIDE ELEVATION

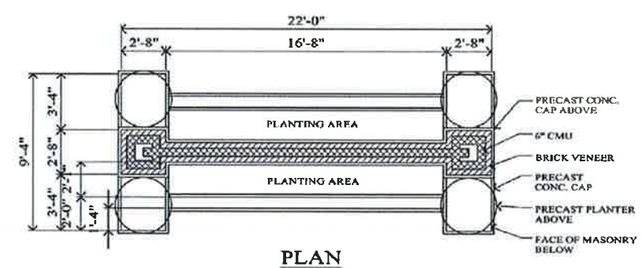

PLAN

SIGNAGE REQUIREMENTS PER ZONING		
PROVIDED AREA PER SIDE	TOTAL PROVIDED AREA	TOTAL ALLOWABLE AREA (EACH SIDES)
70 SQ. FT.	140 SQ. FT.	100 SQ. FT.

MONUMENT SIGN

RECEIVED
MAY 09 2016
BY:

arete design studio, ltd
architecture • planning • design
13543 West 185th Street, Mokena, Illinois 60448
815.485.7333 arete ltd.com

MONUMENT SIGN AND TRASH ENCLOSURE

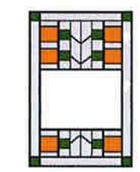

THE LANDINGS OFFICE PARK

COOPER ROAD AND ROUTE 30
NEW LENOX, IL

DEVELOPER:

WE

WANER ENTERPRISES, INC
10150 SOUTH VIRGINIA AVENUE, SUITE J
CHICAGO RIDGE, IL 60415
(708) 423-8200

EXH-2

PROJECT #: 14225
REVISED: 03/15/16
DATE: 05/07/15
SCALE: AS NOTED

©COPYRIGHT 2015
arete design studio, ltd
ALL RIGHTS RESERVED